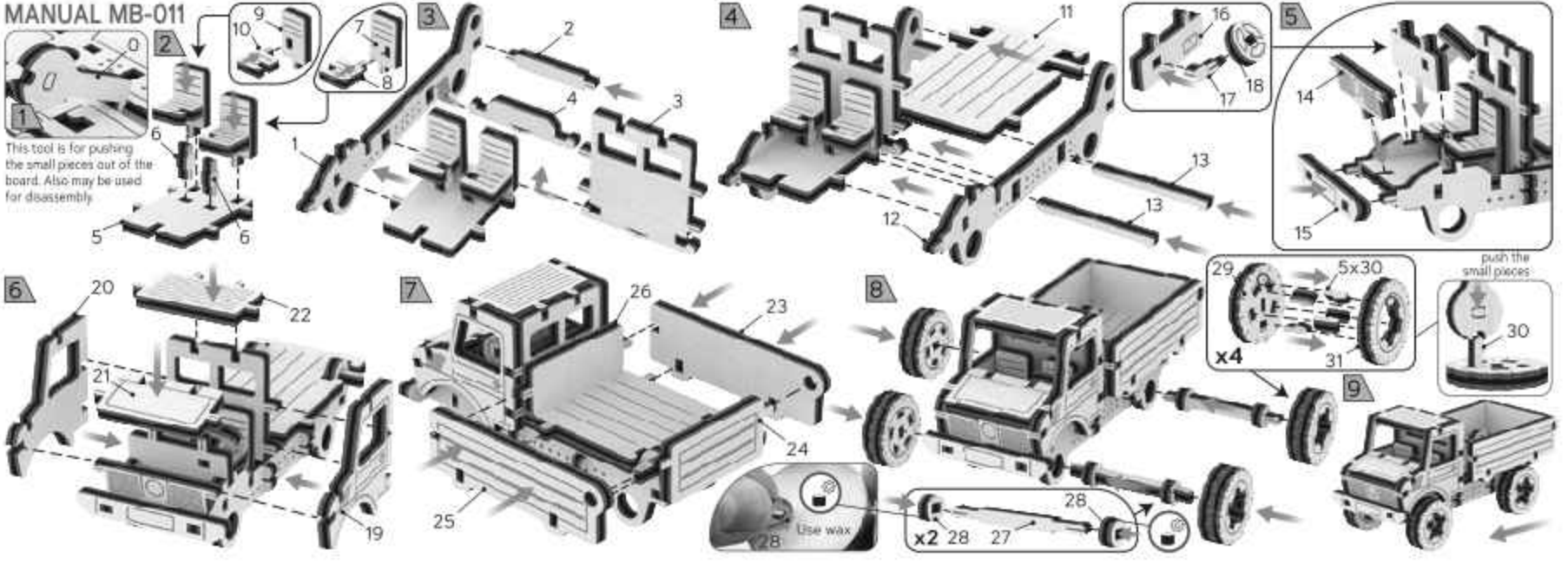MANUAL MB-011